Bosston
A QUALITY PRODUCT

FLUORESCENT INDUSTRIAL LIGHTING FIXTURES
ENCLOSED AND GASKETED (VAPORTIGHT)

Certification Number:

TIS 1955-2542 TIS 902-2532

(TIS902 -Certification Under Preparation)

Technical data

Type of Protection: Ex nd IIA T6

Conforming to : Standards IEC 60079-15

Marking for test : Ex II2G

Degree of Protection : IP65 IEC 60529

Ambient Temp. (Ta) : -20°C to+ 50°C

Rated Voltage : 220-240V.AC. 50/60Hz.

Type : FWF

Lamp : Fluorescent 18 / 36w.Socket G13

Ballast : Rabit - Start 20,40w. or Electronic 18,36w.

Enclosure entry holes : Direct entry 2 x 1/2" NPT.

Power factor cos : P.F. ≥0.95

Protection class for UL. : Class I, Divition2 Group.C,D
Class II, Division 2 Groups.E,F,G
Class III

Protection class for IEC : Zone 2

Options : Fixture hangle box 2 way 2x1/2" (for pendant type)
Stopping plug 1x1/2" and Ceilling Saddle 1x1/2"

Transparent cover : Heat tempered glass

Reflector : High grade aluminium anodised reflector

Applications:

The *FWF* Fluorescent Lighting Fixtures are used in

- non-hazardous ares where dust, dirt, vapor,smoke, fumes mositure, and corrosive conditions are present
- Use where broken lamps would damage machinery or processes, or harm people working in the area
- Especially suitable in areas where stringent sanitation requirements exist.

FWF 240 EB

Features:

- Underwriters'Laboratories listed as enclosed and gasketed
- One-piece welded body construction prevents moisture and dust accmulation.Easier to clean
- Corrosion resistant comstruction retains brilliance and reflectivity.
- Reflectors can be removed, replaced, adjusted with only a screwdrive.

Standard Materials:

- Reflector - Anodized aluminum
- Glass - Heat tempered
- Body - Stainless steel
- Body - Sheet - Chomium plated

Standard Finishes:

- Stainless steel - Natural
- Sheet - Natural

Options:

- Reflector aluminium , add suffix - *A*
- Emergency power pack, add- suffix - *E*
- Body Stainless , add suffix - *S*
- Body Sheet , add suffix - *T*

Catalogue Numbers:

Lamp Watt.	Cat.,No.	Body	Weight (kgs.)
1 X 36	FWF 140 EB	Stainless	11.80
2 X 36	FWF 240 EB	Stainless	15.20
2 X 36	FWF 240 EBS	Sheet	15.80

Dimension In MM.

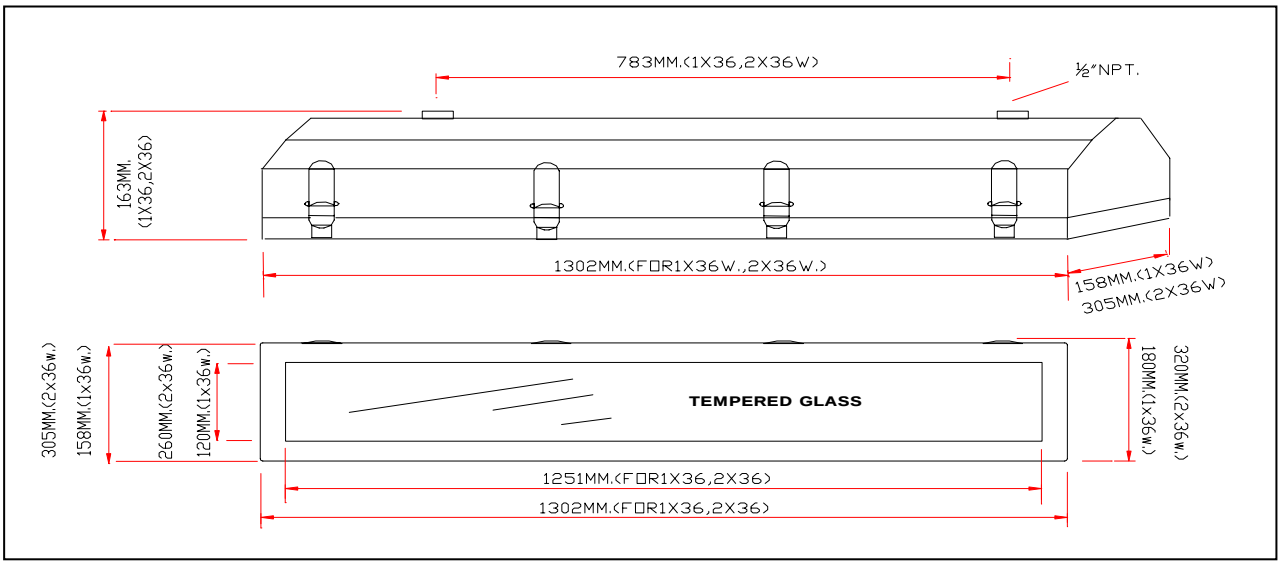

L